ARKETIPO / INDOOR

SOFA SANTOS XL



STRUCTURE: solid iroko wood with water-repellent vegetable oils finish.

SPRINGING: zinc-coated metal slats, epoxy powder coating, colours brown and green.

SEAT UPHOLSTERY : multi-density expanded polyurethane (D35SR.ve. + memory MFC35). Inner cover in waterproof polyester coupled with resin lining 200gr, which improves protection from water and moisture.

BACK UPHOLSTERY: multi-density expanded polyurethane (D35SR.ve. + memory MFC35). Inner cover in waterproof polyester coupled with resin lining 200gr, which improves protection from water and moisture. Backs and roll have a weighted insert to increase stability.

BACK CUSHION : polyester fibre covered with waterproof fabric and breathable lining.

SEAT HEIGHT: 39 cm

COFFE TABLE: solid iroko wood with water-repellent vegetable oils finish.

NOTE: the upholstery cannot be exposed to constant and heavy rains. We suggest using our protective covers made of breathable and waterproof polyester marine canvas, ideal to prevent mould formation. They can be washed with neutral detergent, Please do not fold wet covers and store them only when dry.

seat

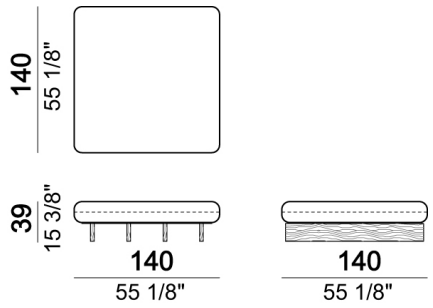

seat

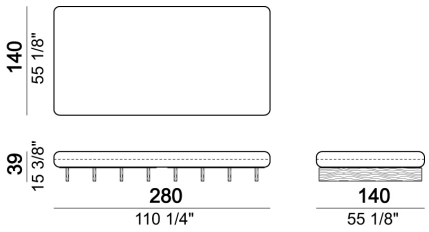

composition A (4 seats 140x140, 4 backs, 4 back cushions, coffe table)

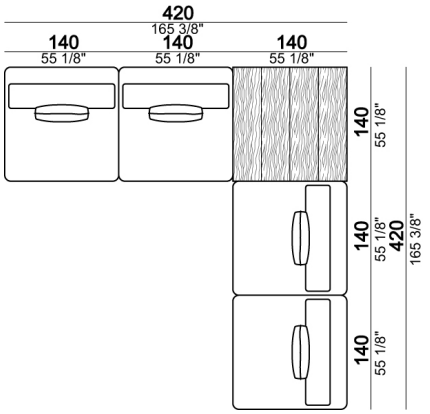

composition B (5 seats 140x140, 4 backs, 4 back cushions)

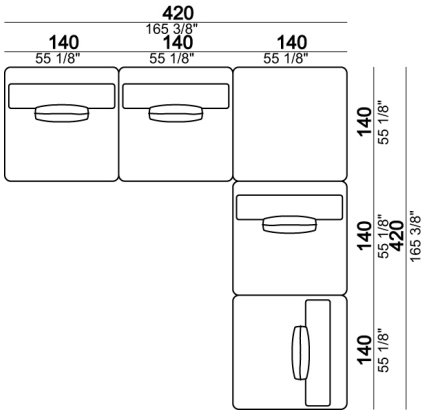

composition C (1 seat 280x140, 2 seats 140x140, 3 backs, 3 back cushions)

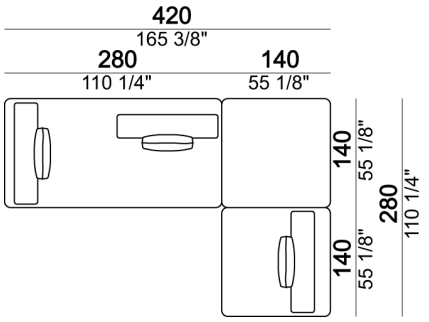

back cushion

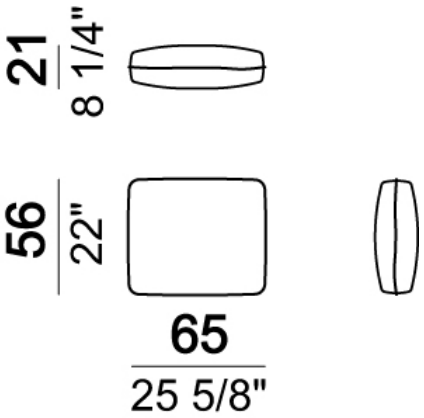

Small table

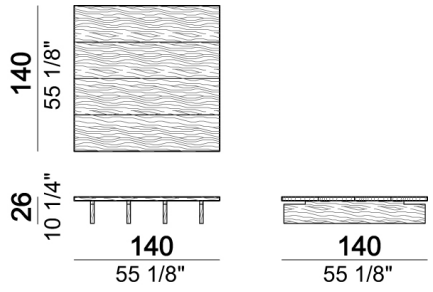

back

