ARKETIPO / INDOOR

designed by Gino Carollo 2022

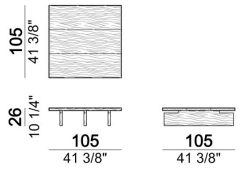
105
41 3/8"
26
10 1/4"
105
41 3/8"
105
41 3/8"

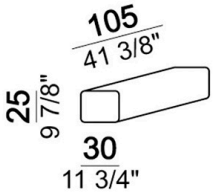
105
41 3/8"
25
9 7/8"
30
11 3/4"

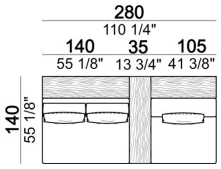
280
110 1/4"
140
55 1/8"
35
13 3/4"
105
41 3/8"
140
55 1/8"

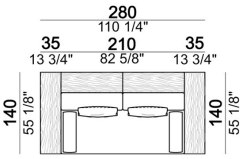
280
110 1/4"
35
13 3/4"
210
82 5/8"
35
13 3/4"
140
55 1/8"
140
55 1/8"

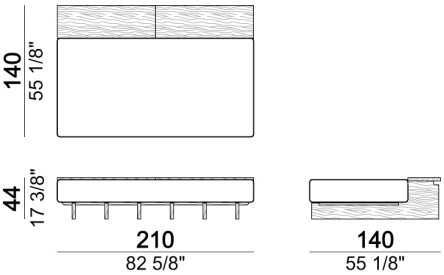
140
55 1/8"
44
17 3/8"
210
82 5/8"
140
55 1/8"

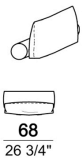
68
26 3/4"

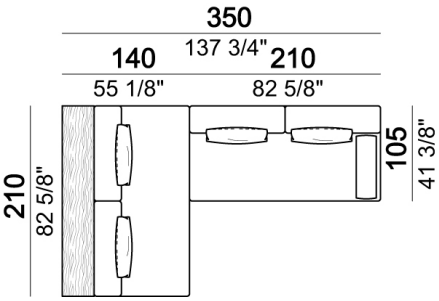
350
137 3/4"
140
55 1/8"
210
82 5/8"
210
82 5/8"
105
41 3/8"

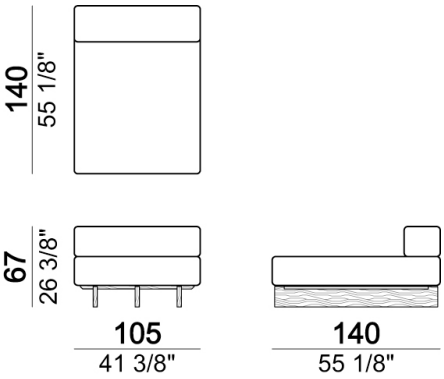
140
55 1/8"
67
26 3/8"
105
41 3/8"
140
55 1/8"

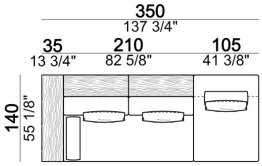
350
137 3/4"
35
13 3/4"
210
82 5/8"
105
41 3/8"
140
55 1/8"

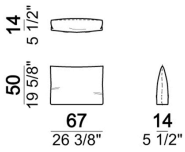
14
5 1/2"
50
19 5/8"
67
26 3/8"
14
5 1/2"

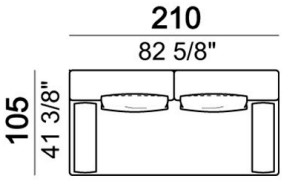
210
82 5/8"
105
41 3/8"

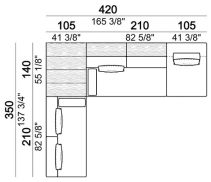
420
165 3/8"
105
41 3/8"
210
82 5/8"
105
41 3/8"
140
55 1/8"
350
137 3/4"
210
82 5/8"

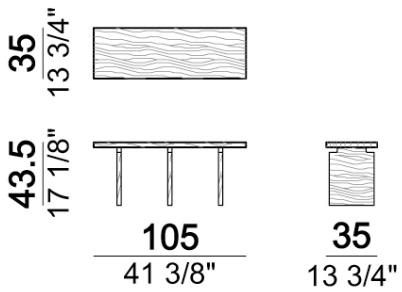
35
13 3/4"
43.5
17 1/8"
105
41 3/8"
35
13 3/4"

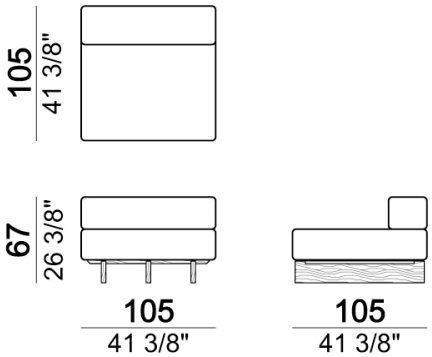
105
41 3/8"
67
26 3/8"
105
41 3/8"
105
41 3/8"

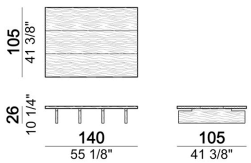
105
41 3/8"
26
10 1/4"
140
55 1/8"
105
41 3/8"

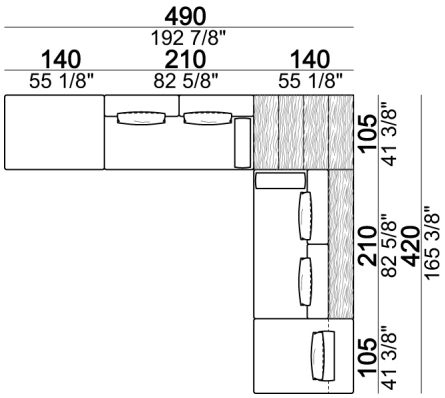
490
192 7/8"
140
55 1/8"
210
82 5/8"
140
55 1/8"
105
41 3/8"
210
82 5/8"
420
165 3/8"
105
41 3/8"

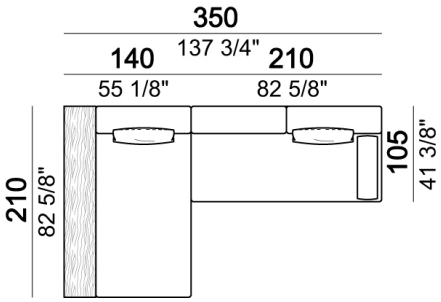
350
137 3/4"
140
55 1/8"
210
82 5/8"
210
82 5/8"
105
41 3/8"

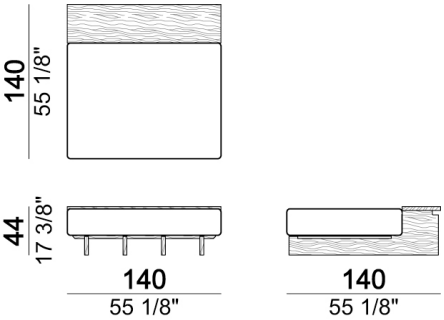
140
55 1/8"
44
17 3/8"
140
55 1/8"
140
55 1/8"

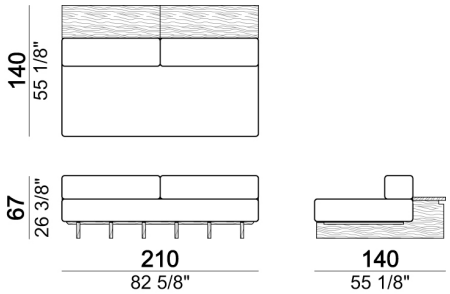
140
55 1/8"
67
26 3/8"
210
82 5/8"
140
55 1/8"

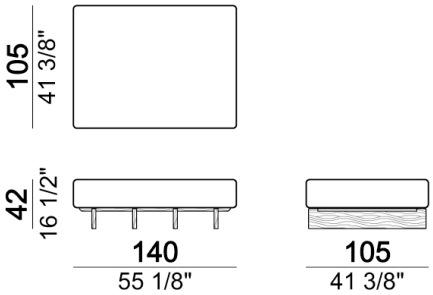
105
41 3/8"
42
16 1/2"
140
55 1/8"
105
41 3/8"

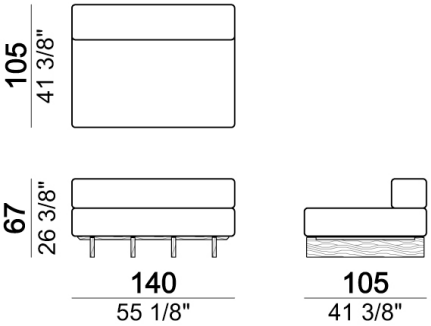
105
41 3/8"
67
26 3/8"
140
55 1/8"
105
41 3/8"

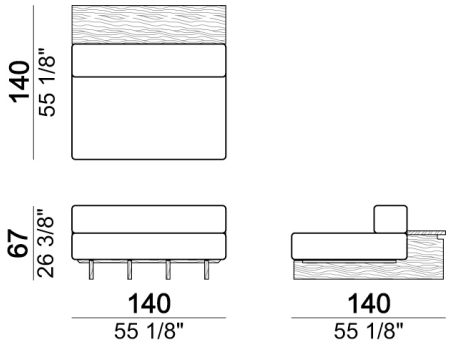
140
55 1/8"
67
26 3/8"
140
55 1/8"
140
55 1/8"

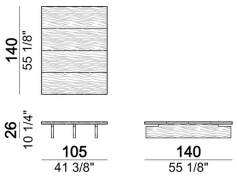
140
55 1/8"
26
10 1/4"
105
41 3/8"
140
55 1/8"

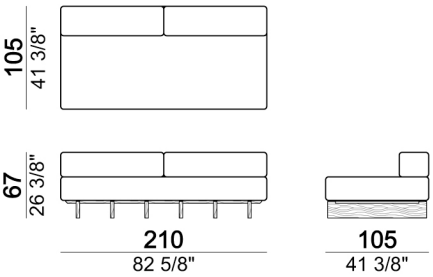
105
41 3/8"
67
26 3/8"
210
82 5/8"
105
41 3/8"

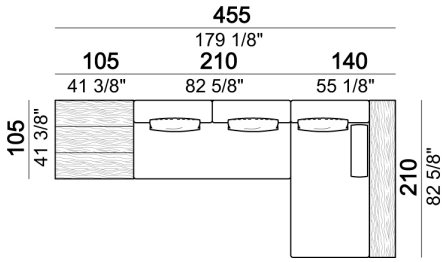

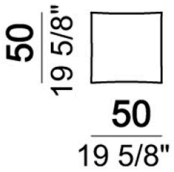

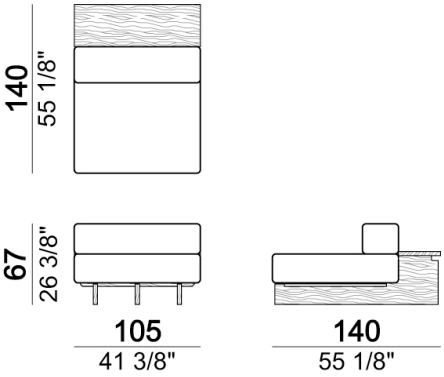

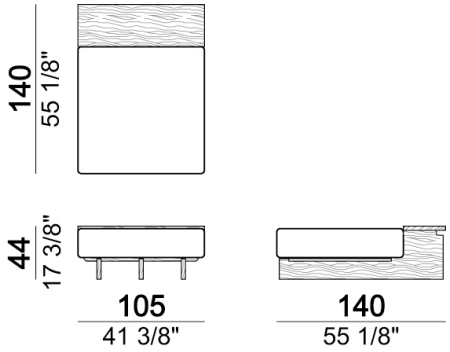

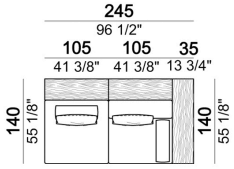

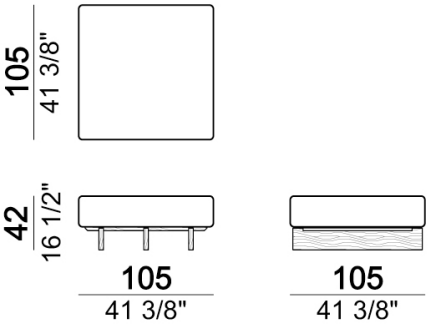

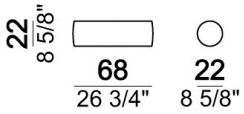

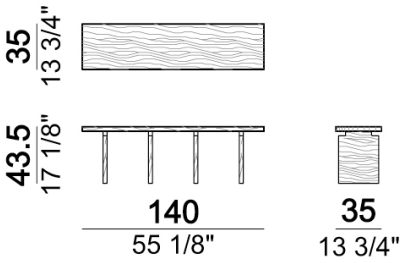

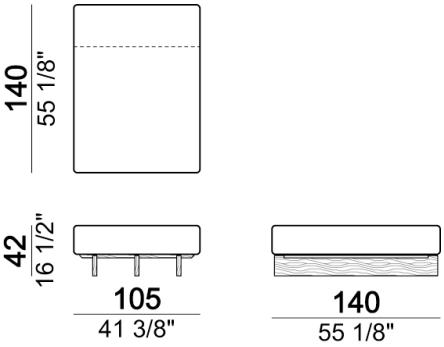

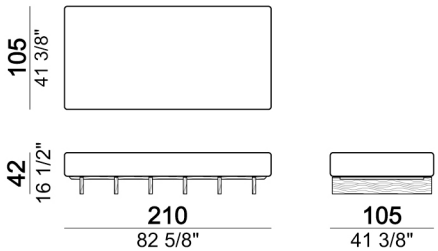

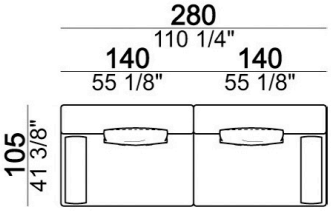

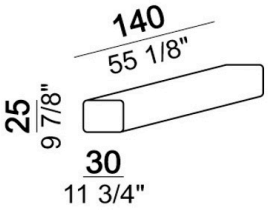

arketipo firenze

Arketipo Srl P. IVA IT06109200482 - Via Garibaldi 84-86, 50041 Calenzano (Firenze) Italy - T. +39 0558876248